A6435 35mm HEADLESS PINNER

For replacement parts contact your usual Tacwise supplier.

Exploded view drawing

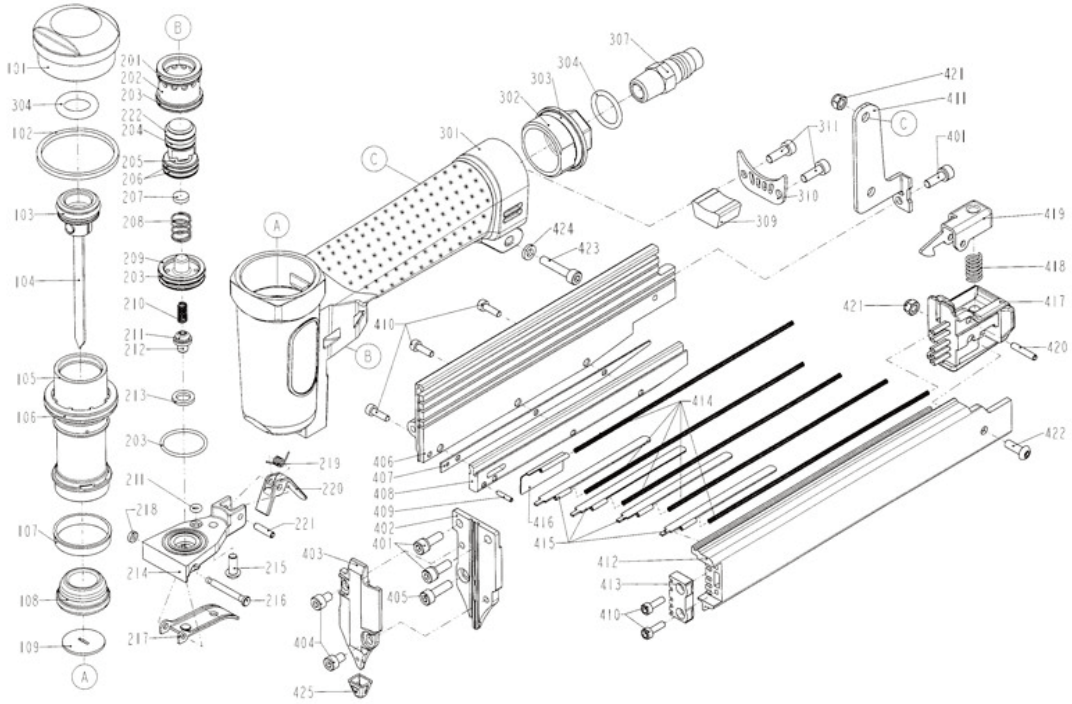

Item	Description
101	Deflector
102	Packing
103	O-Ring
104	Driver Unit
105	Cylinder
106	O-Ring
107	Cylinder Ring
108	Bumper
109	Driver Guide
201	O-Ring
202	Trigger Valve Head
203	O-Ring
204	O-Ring
205	Valve Plunger
206	O-Ring
207	Cushion
208	Spring
209	Plunger Cap
210	Spring
211	O-Ring
212	Plunger
213	Collar
214	Plunger Cap
215	Half Round HD. Hex. Bolt
216	Trigger Pivot Pin
217	Trigger
218	Urethane Retainer
219	Spring
220	Safety Stopper
221	Spring Pin
222	O-Ring
301	Gun Body Unit
302	End Cap
303	O-Ring
304	O-Ring
307	Air Plug
309	Muffler
310	Guide Plate

Item	Description
311	Hex. Soc. HD. Bolt
401	Bolt Assembly
402	Driver Guide
403	Driver Guide Cover A
404	Hex. Soc. HD. Bolt
405	Hex. Soc. HD. Bolt
406	Magazine A
407	Flat Bar
408	Magazine B
409	Spring Pin
410	Hex. Soc. HD. Bolt
411	Bracket
412	Magazine B
413	Fixed Support
414	Pusher Spring
415	Stopper
416	Pusher
417	Protecting Hood Cover
418	Safety Spring
419	Latch
420	Spring Pin
421	Lock Nut
422	Half Round HD. Hex. Bolt
423	Hex. Soc. HD. Bolt
424	Flat Washer
425	Protective Casing